PAGE NO	PAGE TITLE
01	TITLE PAGE
02	REGULATOR AND CONNECTORS
03	REVISION HISTORY

Legal Disclaimer :
The information given in this document shall in no event be regarded as a guarantee of conditions or characteristics. With respect to any examples or hints given herein, any typical values stated herein and/or any information regarding the application of the device, Infineon Technologies hereby disclaims any and all warranties and liabilities of any kind, including without limitation, warranties of non-infringement of intellectual property rights of any third party.

SCH Title : ***RDK DOCK INTERCONNECT BOARD***

Page Title: ***TITLE PAGE***

Size	Document Number	Drawn By	Approved By	Rev
A3		*HUSA*	*GUBILI*	*02*

Date: *Thursday, October 19, 2023* Sheet *1* of *3*

US PD REGULATOR

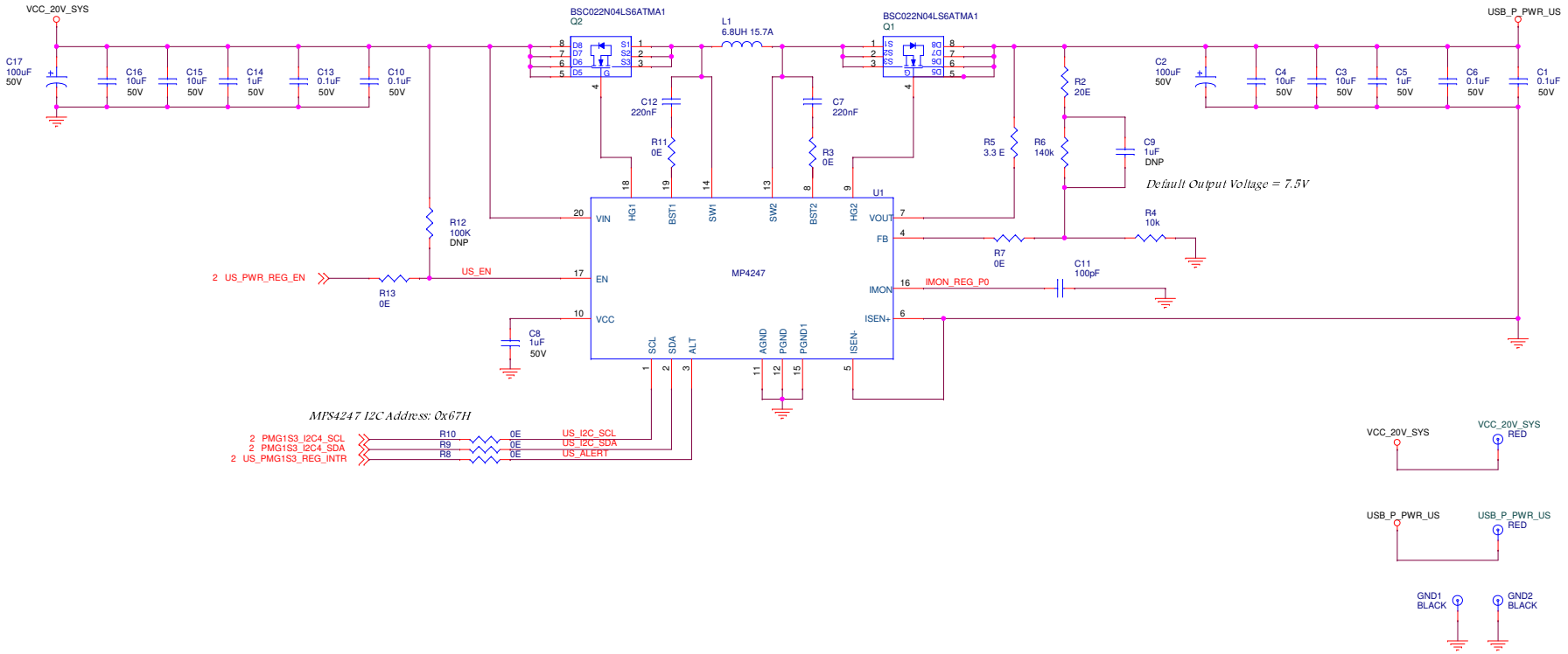

INTERCONNECT BOARD CONNECTOR

INPUT POWER

This connector will be mated with (HTST-106-01-L-DV-P-TR) in the Main board.

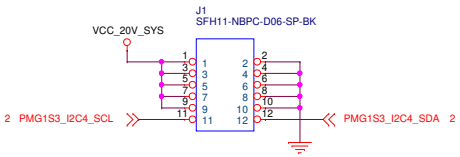

OUTPUT POWER

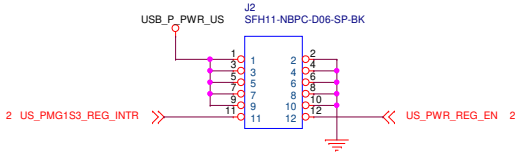

ACCESSORIES

ACC1 SCREW	ACC2 SCREW				
ACC3 STAND OFF	ACC4 STAND OFF	ACC5 WASHER	ACC6 WASHER		

Legal Disclaimer :
The information given in this document shall in no event be regarded as a guarantee of conditions or characteristics. With respect to any examples or hints given herein, any typical values stated herein and/or any information regarding the application of the device, Infineon Technologies hereby disclaims any and all warranties and liabilities of any kind, including without limitation, warranties of non-infringement of intellectual property rights of any third party.

SCH Title : *RDK DOCK INTERCONNECT BOARD*			
Page Title: *REGULATOR & CONNECTOR*			
Size *A3*	Document Number	Drawn By *HUSA*	Approved By *GUBILI*	Rev *02*
Date: *Thursday, October 19, 2023*		Sheet *2* of *3*	

REVISION HISTORY

REVISION NO	DESCRIPTION OF CHANGE'	RELEASE DATE	RELEASE NOTES
REV 01	INITIAL RELEASE	04JAN2023	
REV 02	1. J1 & J2 part number changed to "SFH11-NBPC-D06-SP-BK" 2. Q1 & Q2 part number changed to "BSC022N04LS6ATMA1" 3. L1 part number changed to "XGL1010-682MEB" 4. Added washers 2Qty.	19OCT2023	

Legal Disclaimer :
The information given in this document shall in no event be regarded as a guarantee of conditions or characteristics. With respect to any examples or hints given herein, any typical values stated herein and/or any information regarding the application of the device, Infineon Technologies hereby disclaims any and all warranties and liabilities of any kind, including without limitation, warranties of non-infringement of intellectual property rights of any third party.

SCH Title : *RDK DOCK INTERCONNECT BOARD*
Page Title: *REVISION HISTORY*

Size	Document Number	Drawn By	Approved By	Rev
A3		HUSA	GUBILI	02

Date: Thursday, October 19, 2023 Sheet 3 of 3